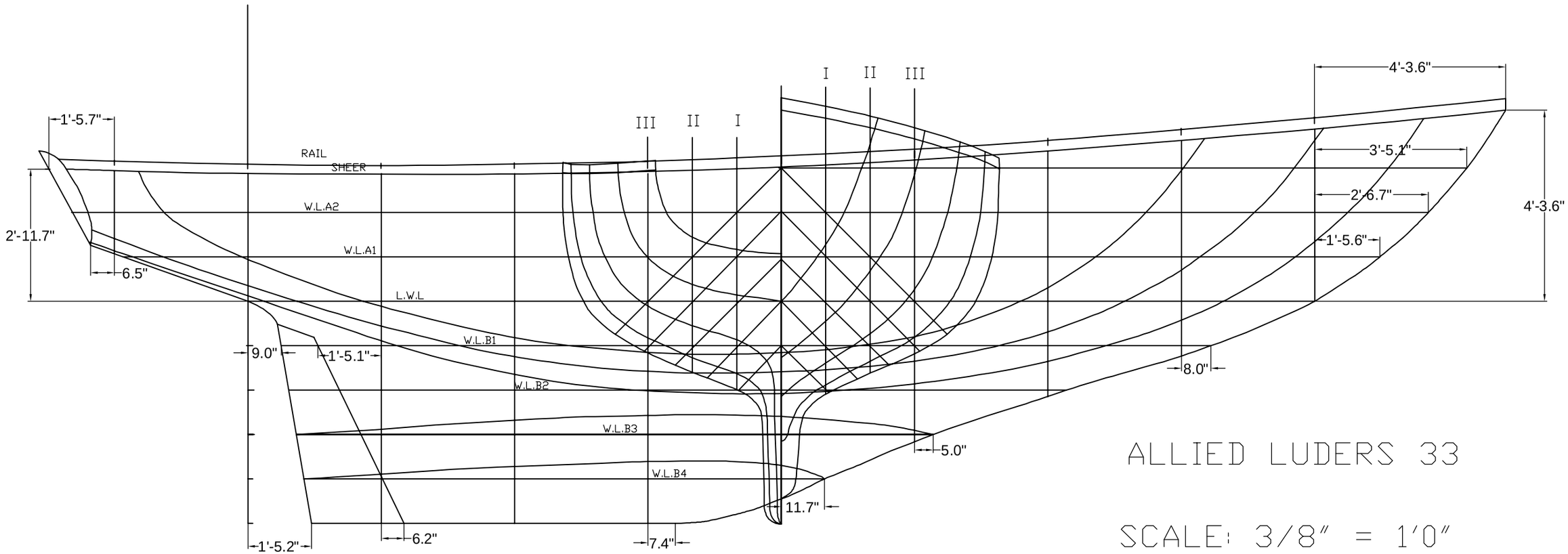

ALLIED LUDERS 33

SCALE: 3/8″ = 1′0″

L.O.A. = 33′0″ L.W.L. = 24′0″ DRAFT = 5′0″ BEAM = 9′11″